17-4 1.375

Work Order ID 72117

Tuesday, July 19, 2011 12:38:15 PM

Item ID: D3689-1
Revision ID:
Item Name: SLEEVE
Start Date: 7/19/2011 **Start Qty:** ~~4.00~~ 8.0 Ad
Required Date: 7/25/2011 **Req'd Qty:** ~~4.00~~
Reference:

Accept **Setup Start** **Stop**

Cust Item ID:
Customer:

Run Start **Stop**

Approvals: **Process Plan:** _____ **Date:** 7-07-19 **Tooling:** _____ **Date:** _____
QC: _____ **Date:** _____ **SPC (Y/N):** _____ **Date:** _____

Sequence ID/ Work Center ID	Operation Description	Set Up/ Run Hours	Tool ID	Tool #	Plan Code	Accept Qty	Reject Qty	Reject Number	Insp. Stamp
Draw Nbr	**Revision Nbr**								
D3689	Rev B								
100	DOOSAN LATHE	0.00				7			
Doosan	**Memo**	0.00							
Doosan Lathe	1- Turn as pér Folio FA722 Rev: B & Dwg D3689 Rev: B 2-CHECK THREAD WITH GO-NO GO GAUGE DT9450 A & B 3-Deburr per dwg D3689	SA 11/9/2							
110	QC2- Inspect parts off machine FAI/FAIB	0.00				7			
QC	**Memo**	0.00							
Quality Control		SA 11/9/2							
120	CONVENTIONAL MILLING MACHINE	0.00				7			
Mill Conv	**Memo**	0.00 SA 11/9/2							
Conventional Milling Machine	C'sink .188" holes as per dwg D3689								

N10

Dart Aerospace Ltd

W/O: 72117	WORK ORDER CHANGES						
DATE	STEP	PROCEDURE CHANGE	By	Date	Qty	Approval Chief Eng / Prod Mgr	Approval QC Inspector

Part No: D36894 PAR #: N/A Fault Category: Machining NCR: (Yes) No DQA: [illegible] Date: 11.10.28

11-928 Resolution: Scrap Disposition: Scrap QA: N/C Closed: [illegible] Date: 11/10/31

NCR:	WORK ORDER NON-CONFORMANCE (NCR) 136.59							
DATE	STEP	Description of NC Section A	Corrective Action Section B			Verification Section C	Approval Chief Eng	Approval QC Inspector
			Initial Chief Eng	Action Description Chief Eng	Sign & Date			
11/9/2	100	Ref. only. test piece [illegible] Caused part to be scrap R.C. Process. (Part had chip in thread)	[illegible] 11.09.07	Scrap + Destroy QA x1 no replace.. Replace go/no go gauge	[illegible] 11/9/2	[illegible] 11/09/15	[illegible] 11.07.09	[illegible] 11/09/07

NOTE: Date & initial all entries

Work Order ID 72117

Tuesday, July 19, 2011 12:38:15 PM

Item ID: D3689-1 **Accept** **Setup Start**

Revision ID: **Stop**

Item Name: SLEEVE

Start Date: 7/19/2011 **Start Qty:** 4.00 **Cust Item ID:**

Required Date: 7/25/2011 **Req'd Qty:** 4.00 **Customer:**

Reference:

Approvals: **Process Plan:** _____ **Date:** _____ **Tooling:** _____ **Date:** _____ **Run Start**

QC: _____ **Date:** _____ **SPC (Y/N):** _____ **Date:** _____ **Stop**

Sequence ID/ Work Center ID	Operation Description	Set Up/ Run Hours	Tool ID	Tool #	Plan Code	Accept Qty	Reject Qty	Reject Number	Insp. Stamp
130	QC2- Inspect parts off machine FAI/FAIB	0.00				7			
QC	Memo	0.00							
Quality Control									
140	QC8- Inspect parts - second check	0.00				7	0		
QC	Memo	0.00							
Quality Control	100% CHECK,CHECK ALL DIMENSIONS AND THREAD FIT								
150		0.00							
Purchasing	PURCHASING					11-10-5			
Purchasing	Memo	0.00							

Issue P/O: 15101
LPI Per ASTM 1417 LEVEL 2
Certificate of conformaty is required

Dart Aerospace Ltd

W/O:		WORK ORDER CHANGES					
DATE	STEP	PROCEDURE CHANGE	By	Date	Qty	Approval Chief Eng / Prod Mgr	Approval QC Inspector

Part No: _____ **PAR #:** _____ **Fault Category:** _____ **NCR:** Yes No **DQA:** _____ **Date:** _____

Resolution: _____ **Disposition:** _____ **QA: N/C Closed:** _____ **Date:** _____

NCR:		WORK ORDER NON-CONFORMANCE (NCR)						
DATE	STEP	Description of NC Section A	Corrective Action Section B			Verification Section C	Approval Chief Eng	Approval QC Inspector
			Initial Chief Eng	Action Description Chief Eng	Sign & Date			

NOTE: Date & initial all entries

Work Order ID 72117

Tuesday, July 19, 2011 12:38:15 PM

Item ID: D3689-1 **Accept** **Setup Start**

Revision ID: **Stop**

Item Name: SLEEVE

Start Date: 7/19/2011 **Start Qty:** 4.00 **Cust Item ID:**

Required Date: 7/25/2011 **Req'd Qty:** 4.00 **Customer:**

Reference:

Run Start

Approvals: **Process Plan:** _____ **Date:** _____ **Tooling:** _____ **Date:** _____

Stop

QC: _____ **Date:** _____ **SPC (Y/N):** _____ **Date:** _____

Sequence ID/ Work Center ID	Operation Description	Set Up/ Run Hours	Tool ID	Tool #	Plan Code	Accept Qty	Reject Qty	Reject Number	Insp. Stamp
160	Receive & Inspect for Damage & Mat'l Certs	0.00							
Packaging	**Memo**	0.00							
Packaging	Ensure certificate of conformity is attached								
170	QC5- Inspect part completeness to step on W/O	0.00							
QC	**Memo**	0.00							
Quality Control									
180	Identify as per dwg & Stock Location: 8-75	0.00							
Packaging	**Memo**	0.00							
Packaging									

Accept Qty	Reject Qty	Reject Number	Insp. Stamp
14/10/5			7
	11	10	06
7x	SP	11-10-19	

Dart Aerospace Ltd

W/O:		WORK ORDER CHANGES					
DATE	STEP	PROCEDURE CHANGE	By	Date	Qty	Approval Chief Eng / Prod Mgr	Approval QC Inspector

Part No: _____ **PAR #:** _____ **Fault Category:** _____ **NCR:** Yes No **DQA:** _____ **Date:** _____

Resolution: _____ **Disposition:** _____ **QA: N/C Closed:** _____ **Date:** _____

NCR:		WORK ORDER NON-CONFORMANCE (NCR)						
DATE	STEP	Description of NC Section A	Corrective Action Section B			Verification Section C	Approval Chief Eng	Approval QC Inspector
			Initial Chief Eng	Action Description Chief Eng	Sign & Date			

NOTE: Date & initial all entries

Work Order ID 72117

Tuesday, July 19, 2011 12:38:15 PM

Item ID: D3689-1
Revision ID:
Item Name: SLEEVE

Accept

Setup **Start**
Stop

Start Date: 7/19/2011 **Start Qty:** 4.00
Required Date: 7/25/2011 **Req'd Qty:** 4.00
Reference:

Cust Item ID:
Customer:

Run **Start**
Stop

Approvals: **Process Plan:** _____ **Date:** _____ **Tooling:** _____ **Date:** _____
QC: _____ **Date:** _____ **SPC (Y/N):** _____ **Date:** _____

Sequence ID/ Work Center ID	Operation Description	Set Up/ Run Hours	Tool ID	Tool #	Plan Code	Accept Qty	Reject Qty	Reject Number	Insp. Stamp
190	QC21- Final Inspection - Work Order Release	0.00					11/10/19		
QC Quality Control	**Memo**	0.00							

11-10-19

Dart Aerospace Ltd

W/O:		WORK ORDER CHANGES					
DATE	STEP	PROCEDURE CHANGE	By	Date	Qty	Approval Chief Eng / Prod Mgr	Approval QC Inspector

Part No: _____ **PAR #:** _____ **Fault Category:** _____ **NCR:** Yes No **DQA:** _____ **Date:** _____

Resolution: _____ **Disposition:** _____ **QA: N/C Closed:** _____ **Date:** _____

NCR:		WORK ORDER NON-CONFORMANCE (NCR)						
DATE	STEP	Description of NC Section A	Corrective Action Section B			Verification Section C	Approval Chief Eng	Approval QC Inspector
			Initial Chief Eng	Action Description Chief Eng	Sign & Date			

NOTE: Date & initial all entries

Picklist Print

Tuesday, July 19, 2011 12:38:22 PM

Work Order ID: 72117

Parent Item: D3689-1

Parent Item Name: SLEEVE

Start Date: 7/19/2011 **Required Date:** 7/25/2011

Start Qty: 4.00 **Required Qty:** 4.00

Comments:
IPP Rev:A New Issue 08-02-11 JLM Verified By:EC
IPP Rev:B Material Change 09-01-07 JLM Verified By:EC
IPP Rev:C Add note on material cutting JLM Verified By:JM

Component Item ID/ Item Name	Replacement Item ID	Mfg/ Purch	Bin Item	Primary Location	Last Location	Route Seq ID	Unit of Measure	Qty on Hand	Qty per Kit	Total Qty	Qty Issued	Date Issued	Status
M174PH-H900R1.375 17-4 SS H900 ROUND BAR 1.375		Purchased	No			100	f	24.4970	0.5	2.105263		1/19/2	

Location	Loc Qty	Loc Code
MAT030	24.497	
111123	24.497	

Dart Aerospace Ltd

W/O:		WORK ORDER CHANGES					
DATE	STEP	PROCEDURE CHANGE	By	Date	Qty	Approval Chief Eng / Prod Mgr	Approval QC Inspector

Part No: _____ **PAR #:** _____ **Fault Category:** _____ **NCR:** Yes No **DQA:** _____ **Date:** _____

Resolution: _____ **Disposition:** _____ **QA: N/C Closed:** _____ **Date:** _____

NCR:		WORK ORDER NON-CONFORMANCE (NCR)						
DATE	STEP	Description of NC Section A	Corrective Action Section B			Verification Section C	Approval Chief Eng	Approval QC Inspector
			Initial Chief Eng	Action Description Chief Eng	Sign & Date			

NOTE: Date & initial all entries

DART AEROSPACE LTD	Work Order:	72117
Description: Sleeve	Part Number:	D3689-1
Inspection Dwg: D3689 **Rev:** B		Page 1 of 1

FIRST ARTICLE INSPECTION CHECKLIST

[X] First Article [ ] Prototype

Drawing Dimension	Tolerance	Actual Dimension	Accept	Reject	Method of Inspection	Comments
1.90	+/-0.030	1.90	✓			
Ø0.768	+/-0.010	.765	✓			
Ø0.063	+0.005/-0.001	Ø.063	✓			
~~R0.06~~	~~+/-0.030~~	~~R~~	✓			~~[illegible]~~
3/4-16UNF-2B	N/A		✓			
0.035 x 45°	+/-0.010 x 0.5°	.035X45	✓			
1.5	+/-0.030	1.480	✓			
1.35	+/-0.030	1.350	✓			
Ø0.188	+0.005/-0.001	.193	✓			
90°	0.5°	90°	✓			
Ø0.250	+/-0.010	Ø.243	✓			
Ø1.075	+0.000/-0.015	1.070	✓			
1.13	+/-0.030	1.110	✓			
4.00	+/-0.030	4.003	✓			
R.06	±.030	R.062	✓			

Measured by:	[signature]
Date:	11/8/26

Audited by:	[signature]
Date:	11/09/15

Prototype Approval:	N/A
Date:	N/A

Rev	Date	Change	Revised by	Approved
A	09.05.11	New Issue	KJ [signature]	[signature]

Dart Aerospace Ltd

W/O:		WORK ORDER CHANGES					
DATE	STEP	PROCEDURE CHANGE	By	Date	Qty	Approval Chief Eng / Prod Mgr	Approval QC Inspector

Part No: _____ PAR #: _____ Fault Category: _____ NCR: Yes No DQA: _____ Date: _____

Resolution: _____ Disposition: _____ QA: N/C Closed: _____ Date: _____

NCR:		WORK ORDER NON-CONFORMANCE (NCR)						
DATE	STEP	Description of NC Section A	Corrective Action Section B			Verification Section C	Approval Chief Eng	Approval QC Inspector
			Initial Chief Eng	Action Description Chief Eng	Sign & Date			

NOTE: Date & initial all entries

H:\fFORMS\Quality Assurance\approved QA\NCRWO RevE

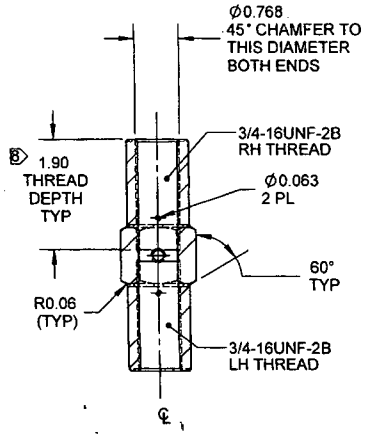

SECTION A-A
D3-1

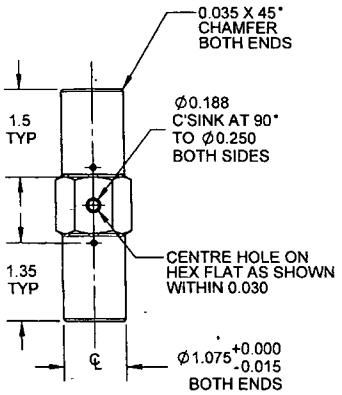

D3689-1 SLEEVE

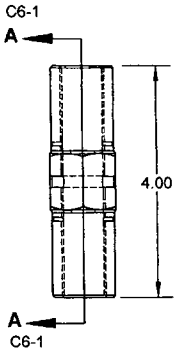

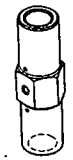

SHOP COPY
RETURN TO
ENGINEERING
UNCONTROLLED COPY
SUBJECT TO AMENDMENT
WITHOUT NOTICE
WORK ORDER
NO. 72117
pl 11-07-19

RELEASED
08/12/15 MP

NOTES:
B
1) MATERIAL: 17-4PH STAINLESS STEEL ROUND BAR PER AMS 5643 H-900 CONDITION
2) FINISH: NONE
3) TOLERANCES: PER DART QSI 018 UNLESS OTHERWISE NOTED
4) UNITS: INCHES UNLESS OTHERWISE NOTED
5) BREAK SHARP EDGES: 0.005 TO 0.010 MAX
6) IDENTIFICATION: NONE
7) WEIGHT: 0.67 lb
8) DIMENSION SHOWN IS MINIMUM DEPTH OF FULL THREAD
9) LPI PER ASTM 1417 LEVEL 2

REV.		BY	DATE
B	CHANGE TO 17-4PH H-900 (ZN A8-1); REFORMATTED TO CURRENT DWG STANDARDS	RF	08.11.24
A	NEW ISSUE	RF	08.05.22

DESIGN	RF	DART AEROSPACE LTD HAWKESBURY, ONTARIO, CANADA	
DRAWN	RF		
CHECKED		DRAWING NO.	REV. B
MFG. APPR.		D3689	SHEET 1 OF 1
APPROVED		TITLE	SCALE
DE APPR.		SLEEVE	NTS
DATE	08.11.24		

COPYRIGHT © 2008 BY DART AEROSPACE LTD
THIS DOCUMENT IS PRIVATE AND CONFIDENTIAL AND IS SUPPLIED ON THE EXPRESS CONDITION THAT IT IS NOT TO BE USED FOR ANY PURPOSE OR COPIED OR COMMUNICATED TO ANY OTHER PERSON WITHOUT WRITTEN PERMISSION FROM DART AEROSPACE LTD.

Dart Aerospace Ltd

W/O:		WORK ORDER CHANGES					
DATE	STEP	PROCEDURE CHANGE	By	Date	Qty	Approval Chief Eng / Prod Mgr	Approval QC Inspector

Part No: _____ **PAR #:** _____ **Fault Category:** _____ **NCR:** Yes No **DQA:** _____ **Date:** _____

Resolution: _____ **Disposition:** _____ **QA: N/C Closed:** _____ **Date:** _____

NCR:		WORK ORDER NON-CONFORMANCE (NCR)						
DATE	STEP	Description of NC Section A	Corrective Action Section B			Verification Section C	Approval Chief Eng	Approval QC Inspector
			Initial Chief Eng	Action Description Chief Eng	Sign & Date			

NOTE: Date & initial all entries

H:\fFORMS\Quality Assurance\approved QA\NCRWO RevE

ACUREN

LIQUID PENETRANT TEST REPORT

P- 05630

PAGE 1 OF 1

CLIENT: DART AEROSPACE
DATE: OCT-05-2011 TIME: AM ☑ PM ☐
ATTENTION: LINDA/CHASTALE/IAN/MATT
ACUREN JOB NO.: 188-11-02189
ADDRESS: 1270, ABERDEEN ST. HAWKESBURY, ON
PO/WO NO.: 15101
WORK LOCATION: AS ADDRESS
ACCEPTANCE STD.: ASTM1417/CSTC38 REV./DATE: 2005
PROJECT: PT → WET FLUORESCENT LIQUID PENETRANT ON "4 CROSSTUBES", "7 SLEEVES", "9 STUDS"
ITEM(S) EXAMINED: — SEE BELOW —

JOB DESCRIPTION | PROCEDURE NO. LT-002 REV./DATE 2007 | TECHNIQUE NO. LT-002 REV./DATE 2007

PART NO.: | MATERIAL: Alodine Aluminum/17-4PH SS | THICKNESS: N/A

SCOPE: PERFORMED A WET FLUORESCENT LIQUID PENETRANT INSPECTION ON 100% OF THE EXTERNAL SURFACE ON ITEMS MENTIONED BELOW

TEST DETAILS

METHOD	☑ FLUORESCENT ☐ VISIBLE	☑ WATER WASH	☐ SOLVENT REMOVABLE ☐ POST EMULSIFIED
FAMILY BRAND	MAGNAFLUX	BLACK LIGHT S/N	13798 ☑ OUTPUT > 1000 µ W/CM² ☐ AMBIENT < 2 fc
PENETRANT	ZL-67 MINIMUM DWELL TIME 10 MIN.	LIGHTING EQUIP.	☐ FLASHLIGHT ☐ TROUBLELIGHT ☐ OUTPUT>100 fc @ SURFACE
PENETRANT REMOVER	H_2O MINIMUM DRY TIME >10 MIN.	OTHER	
DEVELOPER	SKD-S2 MINIMUM DWELL TIME 10 MIN.	LIGHT METER S/N	CAL DUE DATE Nov-2011
DEVELOPER TYPE	☑ NON AQUEOUS ☐ AQUEOUS ☐ DRY		

TEST SURFACE

SURFACE CONDITION	☐ AS GROUND	☐ AS WELDED	☐ MACHINED	☐ SHOT BLASTED	☑ CLEAN BARE METAL
SURFACE TEMPERATURE	☐ < -4°C/ 20°F	☐ -4°C/ 20°F TO 10°C/50°F		☑ 10°C/50°F TO 52°C/125°F	☐ > 52°C/125°F

RESULTS- (☐ METRIC ☐ IMPERIAL)

1	CROSSTUBE W.O. ID 71103	✓	ITEM ID D212-664-107	FWD
2	71109	✓	D212-664-107	FWD
3	71195	✓	D212-664-207	AFT
4	71196	✓	D212-664-207	AFT
5	SLEEVE (7) W.O. ID 72117	✓	D3689-1	
6	STUDS (6) W.O. ID 72045	✓	D3688-1	
7	STUDS (3) W.O. ID 72042	✓	D3688-5	

NO RELEVANT INDICATION WAS DETECTED AS PER APPLICABLE STANDARDS.

11-10-06

Scope of Services
The agreement of Acuren Group Inc. to perform services extends only to those services provided for in writing. Under no circumstances shall such services extend beyond the performance of the requested services. It is expressly understood that all descriptions, comments and expressions of opinion reflect the opinions or observations of Acuren Group Inc. based on information and assumptions supplied by the owner/operator and are not intended nor can they be construed as representations or warranties. Acuren Group Inc. is not assuming any responsibilities of the owner/operator and the owner/operator retains complete responsibility for the engineering, manufacture, repair and use decisions as a result of the data or other information provided by Acuren Group Inc. In no event shall Acuren Group Inc's liability in respect of the services referred to herein exceed the amount paid for such services.
Standard of Care
In performing the services provided, Acuren Group Inc. uses the degree, care and skill ordinarily exercised under similar circumstances by others performing such services in the same or similar locality. No other warranty, expressed or implied, is made or intended by Acuren Group Inc.

SIGNATURES

CLIENT REPRESENTATIVE: Matthew Murdoch (PRINT) — Matthew Murdoch (SIGNATURE) — DTR # E44758

TECHNICIAN (SIGNATURE):

NAME (PRINT): JESSE ROSIER

1st TECHNICIAN: CGSB LEVEL 2 SNT LEVEL 2 CGSB REG. NO 3049

2nd TECHNICIAN: CGSB LEVEL — SNT LEVEL — CGSB REG. NO —

REPORT REVIEWED BY: NAME INITIALS

WHITE – CLIENT COPY CANARY – OFFICE COPY PINK – TECHNICIAN COPY GOLD – OFFICE COPY